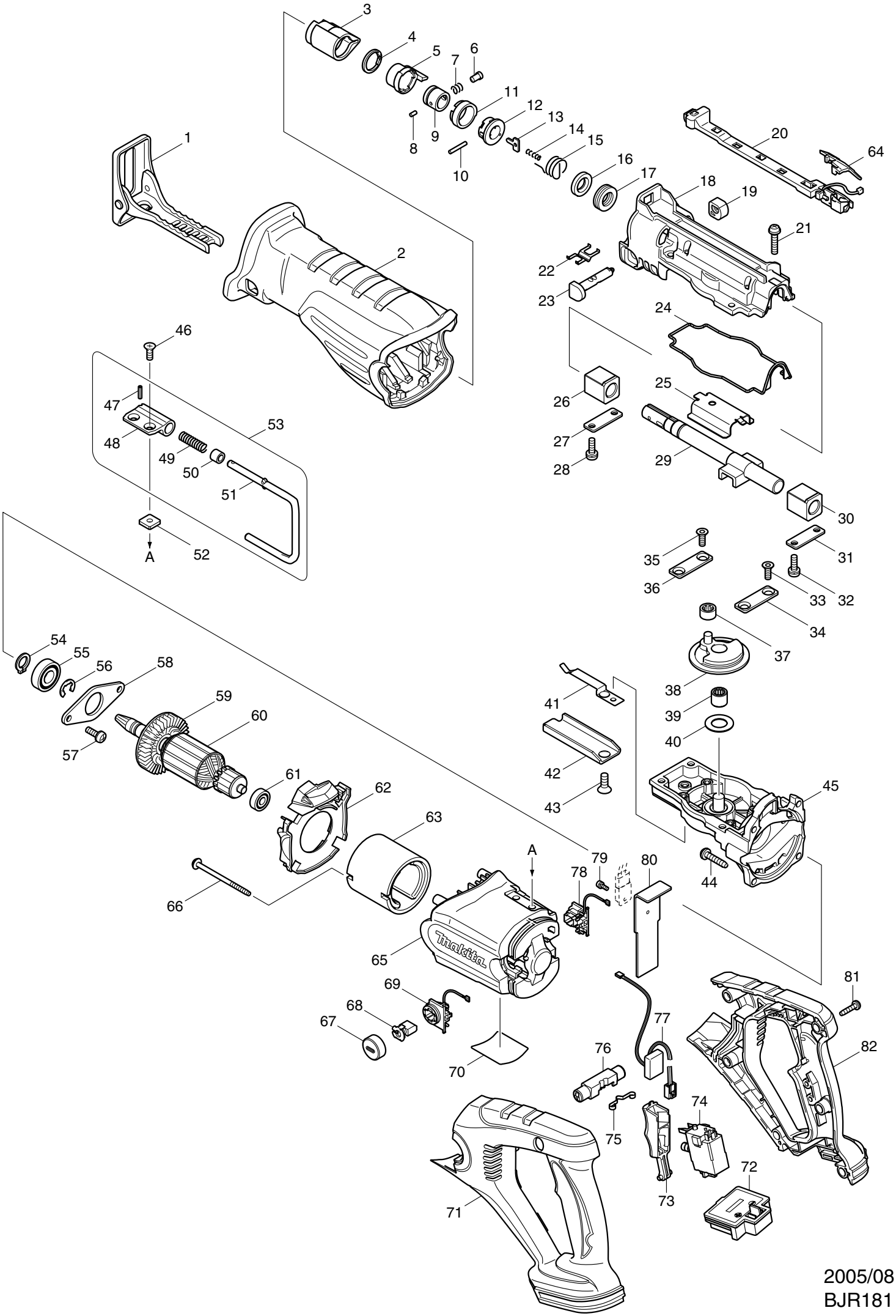

2005/08
BJR181